| EUROMAP 60 | Injection Moulding Machines<br>Determination of Specific Machine Related Energy Consumption |
|---|---|

Version 2.0, June 2009
(8 pages)

This recommendation was prepared by the Technical Commission of EUROMAP.

| | |
|---|---|
| First edition: | April 1995 |
| Version 2.0: | Completely revised |

## Content Page

**1 Scope and application ..... 3**

**2 Definitions ..... 3**

2.1 Total machine related electric energy consumption ..... 3

2.2 Specific machine related energy consumption ..... 3

**3 Measuring method ..... 4**

3.1 Measuring equipment ..... 4

3.2 Test material ..... 4

3.3 Melt quality ..... 4

3.4 Preparation of the injection moulding machine ..... 4

3.5 Measurement ..... 7

**4 Validation ..... 7**

**5 Indication of values ..... 7**

# 1 Scope and application

This recommendation defines the determination of the specific machine related energy consumption for comparison reasons.

The following is excluded:

Energy used for

- water cooling (for machine and mould)
- compressed air.

Only injection moulding machines for thermoplastics with one injection unit with a reciprocating screw, an electrically heated barrel and one horizontal clamping unit without any ancillaries are considered.

# 2 Definitions

## 2.1 Total machine related electric energy consumption

Total electric energy consumption of the machine, based on the effective power (see figure 1), using a measuring method as specified in clause 3.

***Figure 1: Power diagram***

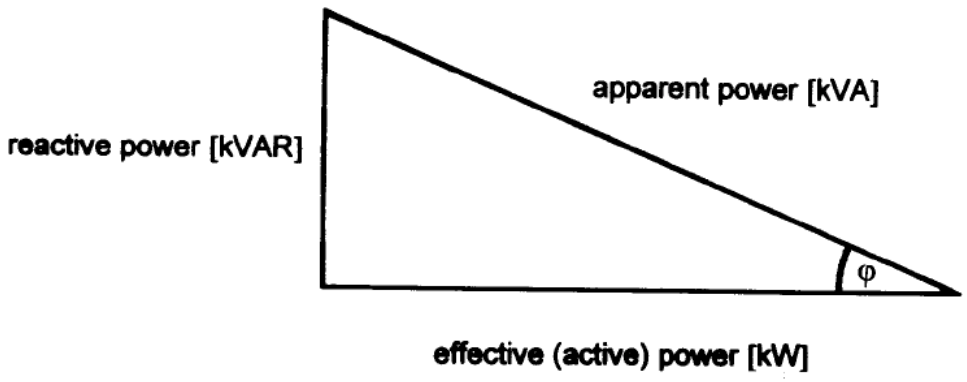


## 2.2 Specific machine related energy consumption

Total machine related electric energy consumption as defined in 2.1 divided by the injected mass.

# 3 Measuring method

## 3.1 Measuring equipment

Power and energy consumption - accuracy ± 2%,

voltage - accuracy ± 2%,

electric current (clamps on main power line to the machine) (50/60 Hz) - accuracy ± 2%.

## 3.2 Test material

The test shall be carried out with virgin PP with MFR = 20 ... 25 g/10min (230°C/ 2,16 kg), not dried and not preheated, at an ambient temperature below 30°C.

## 3.3 Melt quality

The melt shall show no visual inhomogeneity, gassing or degradation.

## 3.4 Preparation of the injection moulding machine

The measuring shall be carried out using an adjustable nozzle as shown e.g. in figure 2 or 3. To avoid dripping of the melt a shut-off device is recommended.

A test block according to EUROMAP 7 shall be mounted on the fixed platen.

The barrel set temperature of all zones shall be 220 °C.

The machine shall be running according to the parameters given in one or more of the columns of table 1 to reach a measuring result as near as possible to the type of application of the injection moulding machine.

As an alternative to the test block specified in EUROMAP 7 another test block with at least the same weight using the same parameters as given in table 1 may be used.

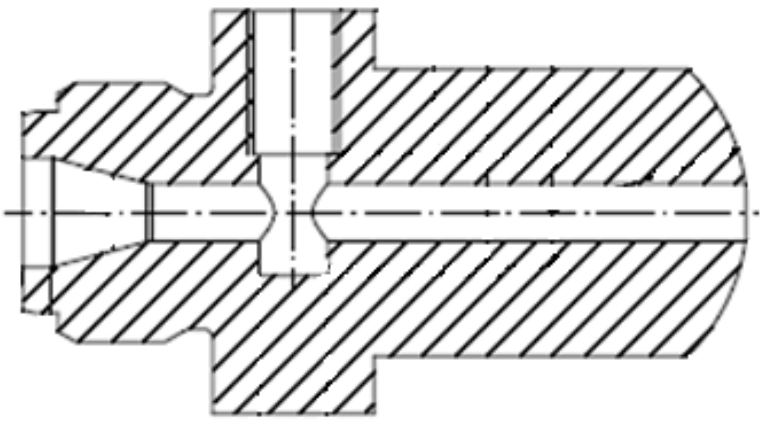

***Figure 2: Test nozzle, type 1 (shut-off device not shown)***

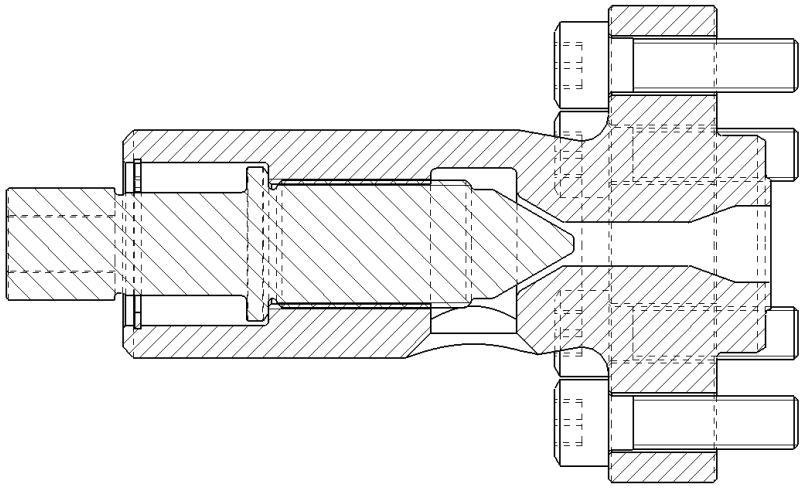

***Figure 3: Test nozzle, type 2 (shut-off device not shown)***

**The following shall be included**:

- all drives for the main movements (mould closing/opening, locking/unlocking, clamping/unclamping, plasticising, injection)
- ejector movements with no load
- controls
- internal maintenance devices (supplied by the machine manufacturer), e. g. cooling of electrical components, grease systems, cooling of the hydraulic oil
- heating of barrel (nozzle and flange included)
- drive (electrical and/or hydraulic) for the nozzle contact force switched on.

**The following shall be excluded:**

- nozzle contact force
- movements of the injection unit
- energy consumption of ancillary equipment, e.g. conveyors, hot runners, dosing equipment, connected to plugs on the injection moulding machine
- pick and place devices connected to the machine controls
- other ancillary equipment
- external supply of fluids, e.g. cooling water, compressed air, hydraulic oil.

***Table 1: Test cycle***

| **Area** | | **Cycle I**<br><br>Thin-walled parts | **Cycle II**<br><br>Technical parts | **Cycle III**<br><br>Commodity parts<br>Thick-walled parts | **Tolerance** |
|---|---|---|---|---|---|
| Clamping unit | Clamping force | max. | max. | max. | |
| | Opening stroke | S[1)] | S[1)] | S[1)] | ± 0,5% |
| | Closing / opening speed | 100 % of nominal value | 100 % of nominal value | 100 % of nominal value | |
| | Acceleration / deceleration | 100 % of nominal value | 100 % of nominal value | 100 % of nominal value | |
| | Ejection | stroke: ≥ 50% of maximum stroke, no load, maximum speed | stroke: ≥ 50% of maximum stroke, no load, maximum speed | stroke: ≥ 50% of maximum stroke, no load, maximum speed | |
| Injection unit | Injection pressure [bar] | ≥ 1000 | ≥ 750 | ≥ 500 | |
| | Injection speed | - - - | ≤ 50 % of maximum | ≤ 50 % of maximum | |
| | Injection volume | plasticised volume | plasticised volume | plasticised volume | |
| | Injection time [2)] [s] | ≤ 0,1 | --- | --- | |
| | Metering stroke [3)] | ≤ 0,5 d | ≤ 2 d | ≤ 3 d | |
| | Plasticising time [s] | resulting | resulting | resulting | |
| | Holding pressure [4)] | ≥ 50 % of the injection pressure | ≥ 50 % of the injection pressure | ≥ 50 % of the injection pressure | |
| | Holding time [s] | 0,5 | 5 | 10 | ± 0,1 |
| | Cooling time [3) 5)] | ≥ 0,5 [s] | ≥ 5[s] + 0,1[s/mm] • d | ≥10[s] + 0,2[s/mm] • d | |
| | Back pressure of the melt [bar] | 50 | 50 | 50 | ± 5 |

1) S = 150 [mm] + 850 [mm] • (max. clamping force [kN] - 1000 [kN]) / 9000 [kN] where 150 mm ≤ S ≤ 1000 mm;

2) injection shall be carried out by means of the adjustable nozzle in figure 2 or 3. The pressure drop in the nozzle shall be adjusted such as to achieve the above injection speed or the injection volume respectively, when the injection pressure is reached;

3) d: srew diameter;

4) simulated by moving against a fixed stop or using a shut-off nozzle;

5) time between end of holding time and start of clamp opening.

**Notes:** Cycle times may include different movements performed at the same time.
All pressures are melt pressures. Internal measurement equipment of the machine shall be used.

### 3.5 Measurement

Measuring of the total machine related energy consumption as defined in 2.1 and the mass injected shall be carried out only in automatic mode when the machine has reached a stable condition, i. e.:

- maximum permissible temperature variation at the measuring points of the barrel ± 3°C within 30 minutes,
- for hydraulic machines, when a stable oil temperature (within specification) has been reached.

The measurement shall include a complete number of consecutive shots within a time not less than 10 min and at least 5 shots. For machines with a screw diameter ≥ 80 mm 3 shots are sufficient.

## 4 Validation

For the cycle(s) considered, the specific machine related energy consumption shall be calculated (see 2.2).

The cos $\varphi$ shall be calculated by dividing the integrated effective power by the integrated apparent power (see figure 1).

## 5 Indication of values

In technical documents the specific machine related energy consumption (kWh/kg), average power consumption (kW), cycle time and the cos $\varphi$ shall be given. The number of the cycle as in table 1 shall be given as well.

**Example:** **Specific machine related energy consumption (EUROMAP 60), Cycle II :**
**0,95 kWh/kg ; 20 kW ; 30 s ; cos $\varphi$ = 0,85**

**Note:** The machine manufacturer may give values for one or more Cycles according to Table 1, depending on the expected application of the injection moulding machine.

# EUROMAP

Europäisches Komitee der Hersteller von Kunststoff- und Gummimaschinen

European Committee of Machinery Manufacturers for the Plastics and Rubber Industries

Comité Européen des Constructeurs de Machines pour Plastiques et Caoutchouc

Comitato Europeo Costruttori Macchine per Materie Plastiche e Gomma

*See you again*

**http://www.euromap.org**

Copyright by EUROMAP